Spare parts
Ersatzteile
Pièces détachées
Reservdelar

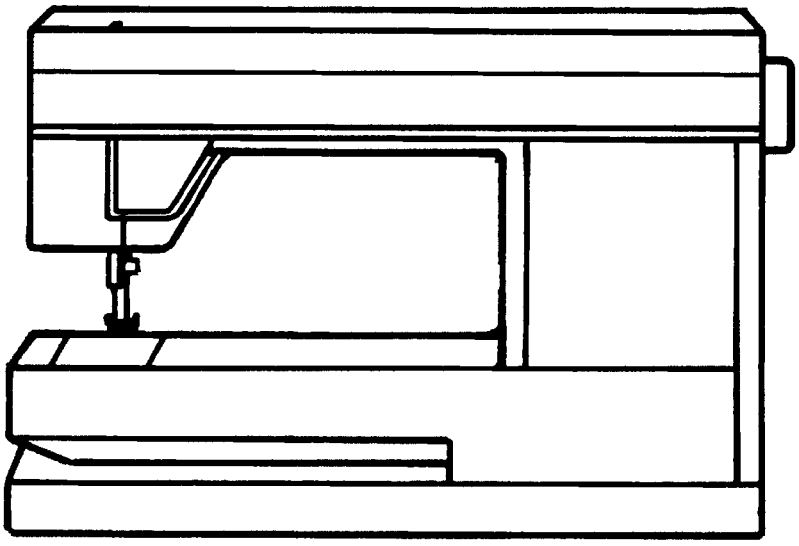

Rose

600

Husqvarna

104 21 96-96
(replaces 104 21 91-96)

Part no	Description	Square
411 72 10-01	Washer	C
411 75 00-07	Needle bar compl.	F
411 75 02-01	Neddle clamp	F
411 75 03-01	Stop needle clamp	F
411 75 04-01	Thread guide	F
411 78 10-03	Light bulb	F
411 96 68-02	Screw	G
411 96 68-10	Screw	A
411 96 68-12	Screw	B
411 96 68-20	Screw	A
411 96 68-21	Screw	F
411 96 71-07	Screw	B
411 96 72-12	Screw	G
411 98 14-01	Washer	C
412 00 13-01	Washer	D
412 02 41-01	Spring	F
412 05 60-01	Screw M5*14	B
412 05 60-04	Screw M3*6	C,E,F
412 05 60-06	Screw M4*12	A,B,D,E,G,H
412 05 60-07	Screw M4*16	G
412 05 60-10	Screw M3*10	F
412 05 60-11	Screw M3*5	D,G
412 13 12-01	Bulb 4 V	B
412 14 30-05	Fuse 6.3 A/250 V	B
412 14 30-06	Fuse 2 A/250 V	B
412 14 32-04	Fuse 3.5 A/250 V (USA)	B
412 14 32-05	Fuse 2 A/250 V (USA)	B
412 15 23-02	Cross head compl.	F
412 15 78-01	Cord device, stand.	J
412 15 79-03	Cord device, USA, Can.	J
412 15 80-02	Cord device, England	J
412 15 81-01	Cord device, Australia	J
412 15 98-01	Spring	J
412 18 45-01	Foot	J
412 21 14-01	Screw, torx M3x4	G
412 21 14-02	Screw, torx M3*6	F
412 21 14-03	Screw, torx M3*8	F
412 21 14-14	Screw, torx M4*16	B
412 22 98-01	Locking nut	E
412 28 19-02	Screw	C,F
412 28 19-03	Screw M4*14	F
412 28 48-01	Spring	C
412 28 51-01	Adjusting arm	F
412 28 54-01	Presser bar	F
412 28 75-01	Base plate	B
412 28 79-01	Screw	D
412 28 81-01	Stitch plate	D
412 29 38-01	Worm gear	D
412 29 73-01	Thread guide	A
412 30 01-01	Washer	H
412 30 06-01	Driver	H
412 30 07-01	Spring	H
412 30 08-01	Pulley	H
412 30 09-01	Hand wheel	H
412 30 16-01	Link	G
412 30 21-01	Locking washer	G
412 30 30-01	Guide arm	F
412 30 47-01	Handle	A
412 30 50-01	Foot	B
412 30 55-01	Rubber ring	A
412 30 66-01	Shuttle shaft	D
412 30 74-01	Damper	D
412 30 78-45	Plastic bobbins (10-pac)	D,K
412 30 79-01	Eccentric feed	D
412 30 83-04	Frame, sewing head compl.	F
412 30 91-03	Regulating dial	F
412 30 96-02	Presser bar guide	F
412 30 97-01	Presser bar lifter	F
412 31 04-02	Guide compl.	C
412 31 06-01	Spring	C
412 31 41-01	Foot control compl.	J
412 31 44-01	Cable standard	J
412 31 44-02	Cable USA, Can, Japan	J
412 31 48-01	Spring	C
412 31 60-41	Shaft, sewing frame	F
412 31 76-01	Toothed segment	F
412 31 79-01	Clutch	H
412 31 81-01	Clamp, lower shaft	D
412 31 84-01	Bushing, feed dog	C
412 31 89-01	Control unit	J
412 32 27-01	Bobbin winding	A
412 32 33-02	Sealing washer	A
412 32 34-03	Step motor, feeding	E
412 32 34-07	Step motor, sewing head	F
412 32 35-01	Reel pin	A
412 32 43-01	Thread reel pin	K
412 32 47-01	Lever thread tension	G
412 32 49-01	Screw thread tension	G
412 32 50-02	Spring holder	G
412 32 67-45	PC-board transformer	B
412 32 71-45	Transformer 220-240 V	B
412 32 71-47	Transformer 120 V	B
412 32 71-48	Transformer 100 V	B

Part no	Description	Square
412 32 84-01	Clamp	D,H
412 33 62-01	Cog wheel	E
412 33 93-01	Attachment, motor	B
412 33 94-01	Muffler, motor	B
412 33 96-01	Distance sleeve	B
412 33 97-01	Motor 24 V	B
412 34 24-03	Base plate	B
412 34 26-01	Spring	A
412 43 42-01	Hard cover	K
412 34 45-01	Holder	B
412 34 47-01	Holder	B
412 34 48-01	Screen	D
412 34 50-01	Eccentric	A
412 34 51-01	Adjusting arm	A
412 34 54-01	Cog belt	H
412 34 60-01	Stop ring	D
412 34 75-01	Feeding step motor	E
412 34 79-01	Calibration stop	E,F
412 34 80-02	Damper	E,F
412 34 81-01	Spring	E
412 34 82-01	Setting screw	E
412 34 84-01	Shaft, feeding compl.	E
412 34 85-01	Joint cross	E
412 34 87-01	Spring	E
412 34 88-01	Fastener, spring	E
412 34 89-01	Spring	F
412 34 91-01	Attachment	F
412 34 92-01	Cog wheel	F
412 34 96-01	Cablage motor	B
412 34 97-01	Cable for PC-board	B
412 35 26-01	Washer	D
412 35 31-01	Thread tension set	G,K
412 35 33-02	Driving wheel compl.	B
412 35 42-01	Pulley	D
412 35 56-01	Sleeve, lamp	K
412 35 62-01	Pin	A
412 35 64-01	Holder	B
412 35 93-01	Cover	A
412 36 14-01	Opener, stitch plate	K
412 36 80-01	Locking washer	C
412 36 82-02	Lower shaft compl.	D
412 36 83-01	Arm shaft	H
412 36 84-01	Cog belt	H
412 36 87-01	Pin	H
412 37 11-01	Thread reel disc 20 mm	A
412 37 11-02	Thead reel disc 40 mm	A
412 37 14-02	Lever feed lift	C
412 37 17-01	Screen	A
412 37 20-01	Knob, feed dog lowering	A
412 37 27-01	Spring	C
412 37 30-01	Window, foil keyboard	A
412 37 35-01	Connector sensor	F
412 37 82-01	Nut	C
412 38 16-03	Feeding unit compl.	C
412 38 43-01	Washer	G
412 39 09-09	Plastic bag with access.	K
412 39 11-02	Cable	B
412 39 44-01	Thread take up	F
412 39 47-01	Washer	D
412 39 54-01	Feed unit compl.	C
412 39 56-02	Frame carrige	C
412 39 59-04	Sewing head compl.	F
412 39 70-01	Guide connector	F
412 40 97-01	Screw	F
412 40 98-01	Screw needle clamp	F
412 41 12-01	Ankel	F
412 41 59-01	Clip	A
412 42 37-01	Thread knife	A,D
412 43 18-01	Feed dog	C
412 44 02-45	PC-board	B
412 44 37-01	Adjustment dial	G
412 44 40-02	Hook	D
412 44 44-01	Cog wheel	D
412 44 45-01	Dust cover	D
412 44 46-01	Adjusting washer	D
412 45 19-01	Back cover	A
412 45 20-01	Back cover , blank cover	A
412 45 21-01	Back cover, free arm. Version 1	
	Fits only with 412 46 09-01	A
412 45 21-02	Back cover, free arm. Version 2	
	Fits only with 412 50 84-01	A
412 45 23-01	Thread knife	A
412 45 24-01	Holder, thread knife	A
412 45 25-01	Front cover compl. Rose HVA	A
412 45 25-02	Front cover compl. Viking	A
412 45 26-01	Front cover	A
412 45 27-01	Foil key board	A
412 45 30-01	Guide, quick info	A
412 45 32-01	Cover	A
412 45 33-01	Window	A
412 45 34-01	Name plate Rose HVA	A
412 45 34-02	Name plate Rose Viking	A
412 45 35-01	Hinge	A

Part no	Description	Square
412 45 36-01	Spring, hinge	A
412 45 43-01	Accessory box	K
412 45 45-01	Thread guide	A
412 45 51-01	Thread tension device	G
412 45 55-01	Take up spring	G
412 45 56-01	Adjusting sleeve	G
412 45 57-01	Bracket and lever	G
412 45 58-01	Sensor	G
412 45 59-01	Plugg Thread tension	G
412 45 60-01	PC-board thread sensor	G
412 45 64-01	Cog wheel	G
412 45 66-01	Attachment, stepmotor	G
412 45 68-01	Guide	G
412 45 69-01	Gear segment	G
412 45 70-01	Step motor, thread tension	G
412 45 72-01	Cog wheel	G
412 45 73-01	Spring, presserfoot lifter	F
412 45 74-01	Gear rack	G
412 45 75-01	Release lever	C
412 45 83-01	Plug	G
412 45 86-01	Thread guide	A
412 45 88-01	Thread support	A
412 45 89-01	Hook cover	D
412 45 91-01	Hook cover, window	D
412 46 03-01	Guide - memory card	B
412 46 04-01	Metal sheet, grounding	B
412 46 07-01	Micro switch, sewing head	F
412 46 09-01	Contact spring, version 1	
	Fits only with 412 45 21-01	A
412 46 13-01	Extension table	K
412 46 22-01	Cover, embriodry	A
412 46 44-01	Adjusting screw, thread tension	D
412 46 45-01	Screw, thread tension	D
412 46 70-01	Screw, embroidery	F
412 47 16-01	Thread tension compl.	D
412 47 50-01	Screw, release lever	C
412 47 66-01	Spring, release lever	C
412 47 71-01	Bobbin case compl.	D
412 47 73-01	Case holder compl.	D
412 48 09-01	Protector, take up	A
412 48 55-03	Cable holder	B
412 48 85-03	Cable holder	G
412 48 86-02	Cable holder	G
412 48 87-01	Cog wheel compl	G
412 50 84-01	Contact spring ,version 2	
	Fits only with 412 45 21-02	A
721 11 87-50	Pin	F
721 41 64-50	Pin	C
721 41 69-70	Pin	E
721 41 87-70	Pin	D,H
721 42 10-10	Pin	D
725 52 20-05	Screw M3*6	E
725 62 91-01	Screw M4*12	F
728 52 17-05	Screw M3*3	E,F
728 52 18-05	Screw M5*6	F
728 52 85-05	Screw M4*6	F
728 52 87-05	Screw M4*8	D
728 53 20-05	Screw M5*5	H
728 73 20-01	Screw	H
728 73 64-05	Screw 6*10 mm	B
728 82 83-05	Screw M4*4	D,H
731 23 12-01	Nut M4	F
734 11 23-71	Washer	G
735 21 36-01	Locking washer	B
735 31 06-20	C-washer	G
735 31 08-00	C-washer	F
735 31 08-20	C-washer	D,G
735 58 35-00	Locking washer	A
735 58 55-00	Locking washer	H
735 61 24-40	Compression ring 3mm	G
735 61 36-40	Compression ring 4mm	F
735 61 53-40	Compression ring 6mm	F

ACCESSORIES

401 53 99-01	Buttonhole knife	K
401 55 55-01	Brush	K
411 17 32-01	Button reed	K
412 01 76-01	Hemmer 10 mm	K
412 34 66-45	Glide plates	K
412 34 73-01	Gathering foot	K
412 38 15-01	Screw driver medium	K
412 38 00-01	Presser foot "A"	K
412 38 01-01	Presser foot "B"	K
412 38 02-01	Buttonhole foot "C"	K
412 38 04-01	Blind stitch foot "D"	K
412 38 05-01	Zipper foot "E"	K
412 38 06-01	Edging foot "J"	K
412 40 80-01	Buttonhole sensor foot	K

OPERATING MANUAL

412 46 39-01	Operating man. Swe	K
412 46 39-06	Operating man. Dan	K
412 46 39-11	Operating man. Fin	K
412 46 39-21	Operating man. Nor	K
412 46 39-26	Operating man. Eng	K
412 46 39-31	Operating man. Fra	K
412 46 39-36	Operating man. Dutch	K
412 46 39-41	Operating man. Ita	K
412 46 39-46	Operating man. Spa	K

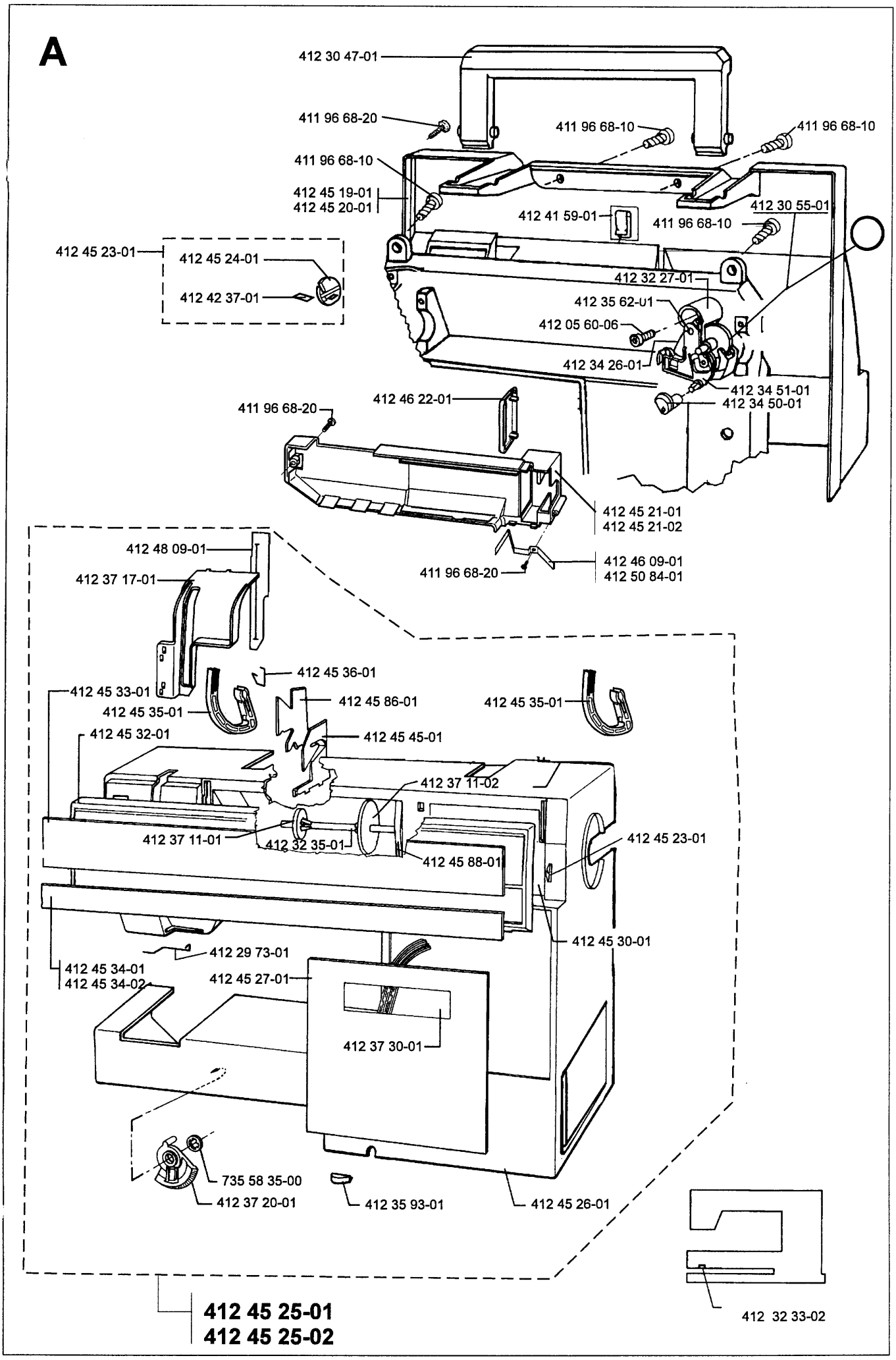
A
412 30 47-01
411 96 68-20
411 96 68-10
411 96 68-10
411 96 68-10
412 45 19-01
412 45 20-01
412 41 59-01
411 96 68-10
412 30 55-01
412 45 23-01
412 45 24-01
412 42 37-01
412 32 27-01
412 35 62-01
412 05 60-06
412 34 26-01
412 34 51-01
412 34 50-01
412 46 22-01
411 96 68-20
412 45 21-01
412 45 21-02
412 46 09-01
412 50 84-01
411 96 68-20
412 48 09-01
412 37 17-01
412 45 36-01
412 45 33-01
412 45 35-01
412 45 86-01
412 45 35-01
412 45 32-01
412 45 45-01
412 37 11-02
412 37 11-01
412 32 35-01
412 45 88-01
412 45 23-01
412 45 30-01
412 29 73-01
412 45 34-01
412 45 34-02
412 45 27-01
412 37 30-01
735 58 35-00
412 37 20-01
412 35 93-01
412 45 26-01
412 32 33-02
412 45 25-01
412 45 25-02

B

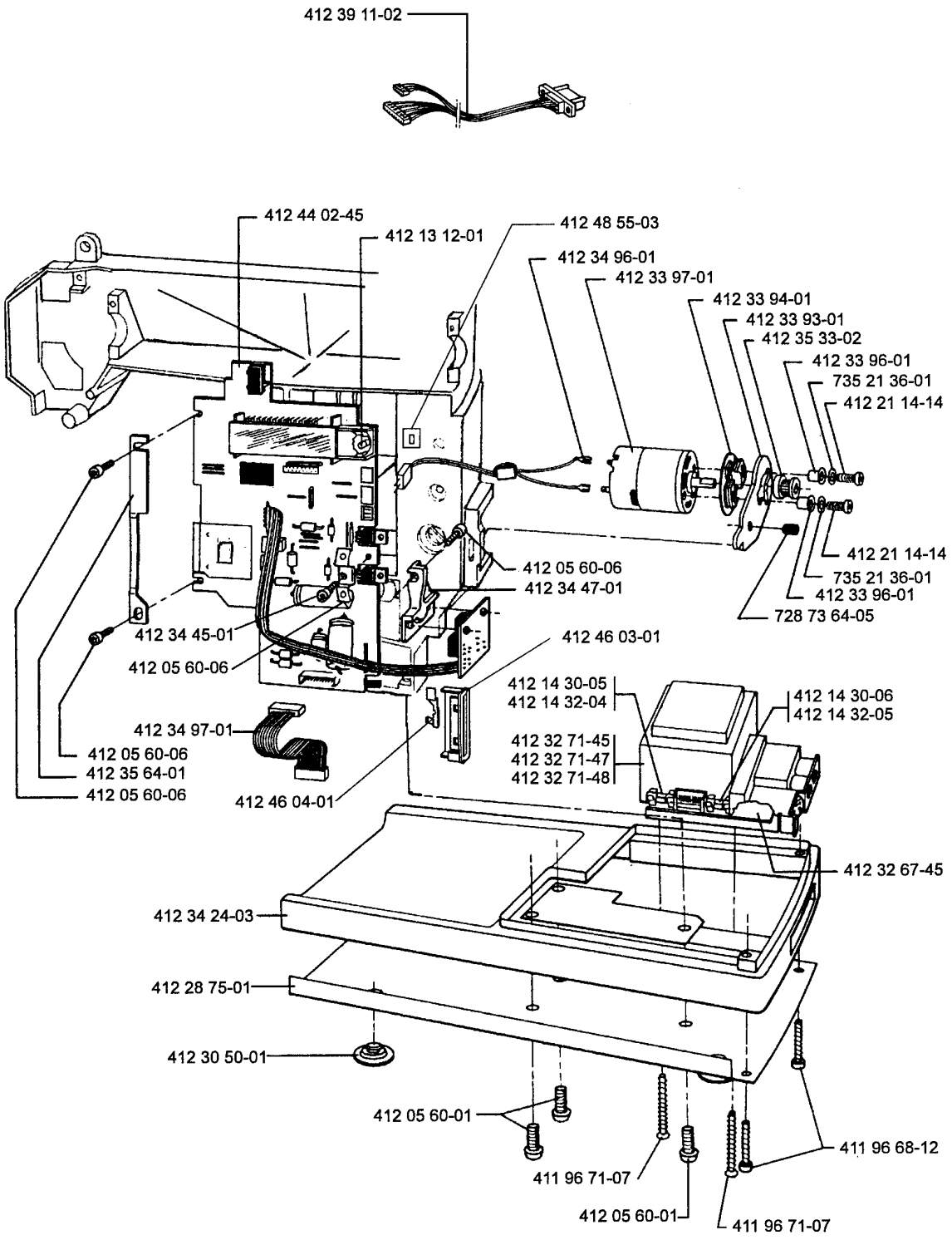
412 39 11-02
412 44 02-45
412 13 12-01
412 48 55-03
412 34 96-01
412 33 97-01
412 33 94-01
412 33 93-01
412 35 33-02
412 33 96-01
735 21 36-01
412 21 14-14
412 21 14-14
735 21 36-01
412 33 96-01
728 73 64-05
412 05 60-06
412 34 47-01
412 34 45-01
412 05 60-06
412 46 03-01
412 14 30-05
412 14 32-04
412 14 30-06
412 14 32-05
412 34 97-01
412 05 60-06
412 35 64-01
412 05 60-06
412 46 04-01
412 32 71-45
412 32 71-47
412 32 71-48
412 32 67-45
412 34 24-03
412 28 75-01
412 30 50-01
412 05 60-01
411 96 68-12
411 96 71-07
412 05 60-01
411 96 71-07

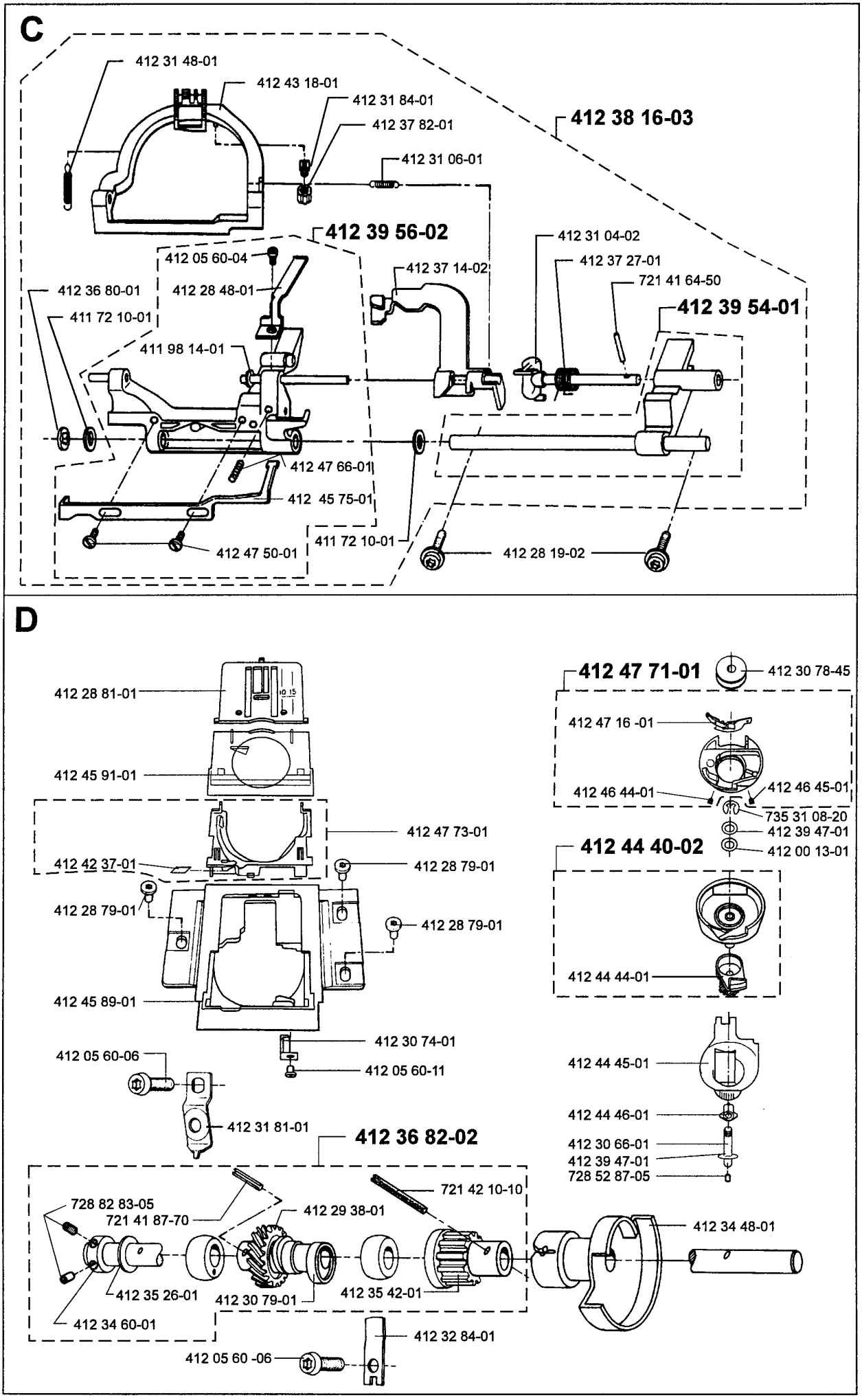
C
412 31 48-01
412 43 18-01
412 31 84-01
412 37 82-01
412 38 16-03
412 31 06-01
412 39 56-02
412 05 60-04
412 31 04-02
412 37 27-01
412 37 14-02
721 41 64-50
412 36 80-01
412 28 48-01
412 39 54-01
411 72 10-01
411 98 14-01
412 47 66-01
412 45 75-01
411 72 10-01
412 47 50-01
412 28 19-02
D
412 47 71-01
412 30 78-45
412 28 81-01
412 47 16 -01
412 45 91-01
412 46 44-01
412 46 45-01
735 31 08-20
412 47 73-01
412 39 47-01
412 44 40-02
412 00 13-01
412 42 37-01
412 28 79-01
412 28 79-01
412 28 79-01
412 44 44-01
412 45 89-01
412 30 74-01
412 05 60-06
412 05 60-11
412 44 45-01
412 31 81-01
412 44 46-01
412 36 82-02
412 30 66-01
412 39 47-01
728 52 87-05
721 42 10-10
728 82 83-05
721 41 87-70
412 29 38-01
412 34 48-01
412 35 26-01
412 30 79-01
412 35 42-01
412 34 60-01
412 32 84-01
412 05 60 -06

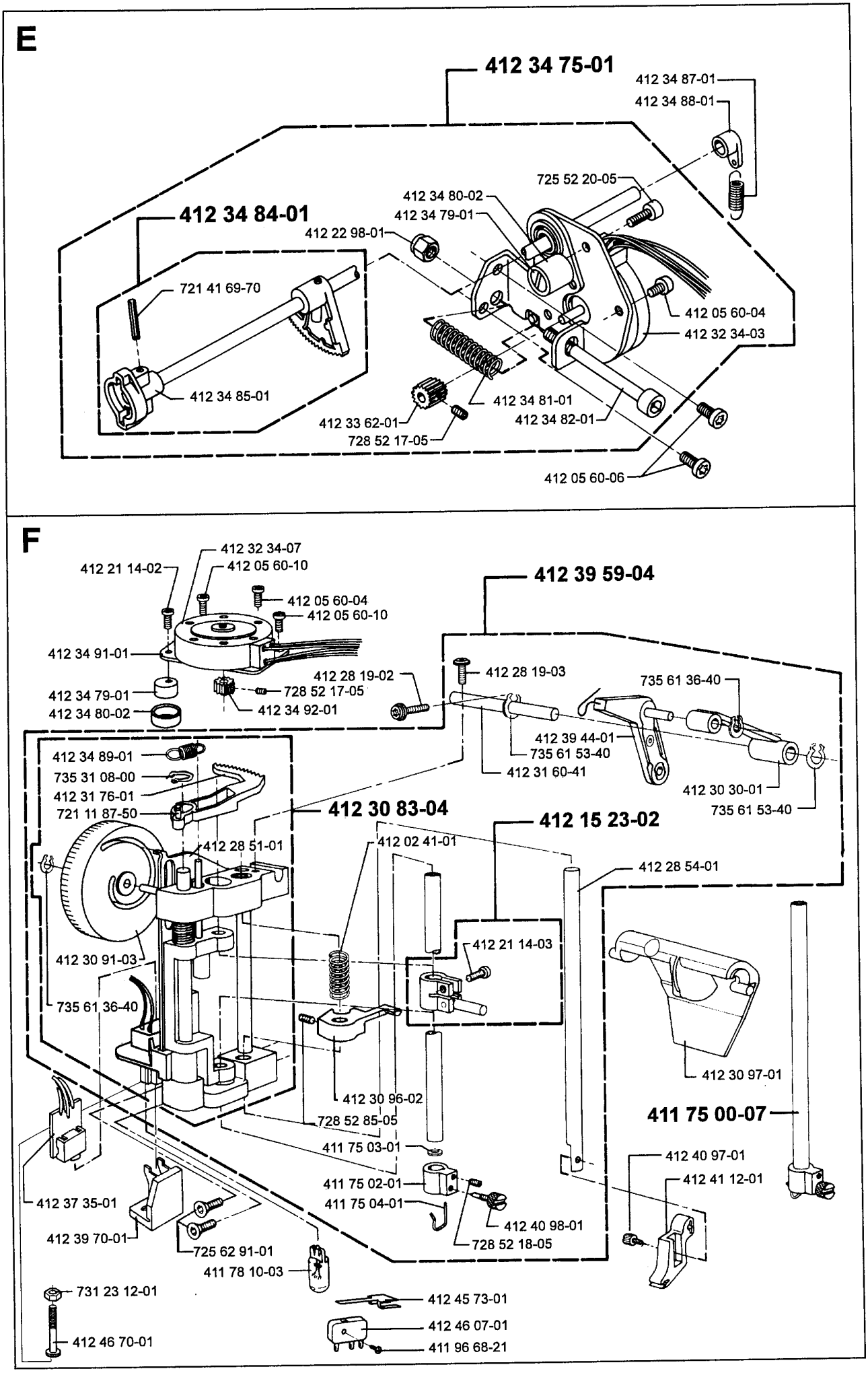
E
412 34 75-01
412 34 87-01
412 34 88-01
725 52 20-05
412 34 80-02
412 34 79-01
412 34 84-01
412 22 98-01
721 41 69-70
412 05 60-04
412 32 34-03
412 34 85-01
412 34 81-01
412 33 62-01
412 34 82-01
728 52 17-05
412 05 60-06
F
412 32 34-07
412 21 14-02
412 05 60-10
412 39 59-04
412 05 60-04
412 05 60-10
412 34 91-01
412 28 19-02
412 28 19-03
735 61 36-40
412 34 79-01
728 52 17-05
412 34 80-02
412 34 92-01
412 39 44-01
735 61 53-40
412 31 60-41
412 34 89-01
735 31 08-00
412 31 76-01
721 11 87-50
412 30 30-01
735 61 53-40
412 30 83-04
412 15 23-02
412 28 51-01
412 02 41-01
412 28 54-01
412 21 14-03
412 30 91-03
735 61 36-40
412 30 97-01
412 30 96-02
411 75 00-07
728 52 85-05
411 75 03-01
412 40 97-01
412 41 12-01
411 75 02-01
411 75 04-01
412 37 35-01
412 40 98-01
728 52 18-05
412 39 70-01
725 62 91-01
411 78 10-03
731 23 12-01
412 45 73-01
412 46 07-01
412 46 70-01
411 96 68-21

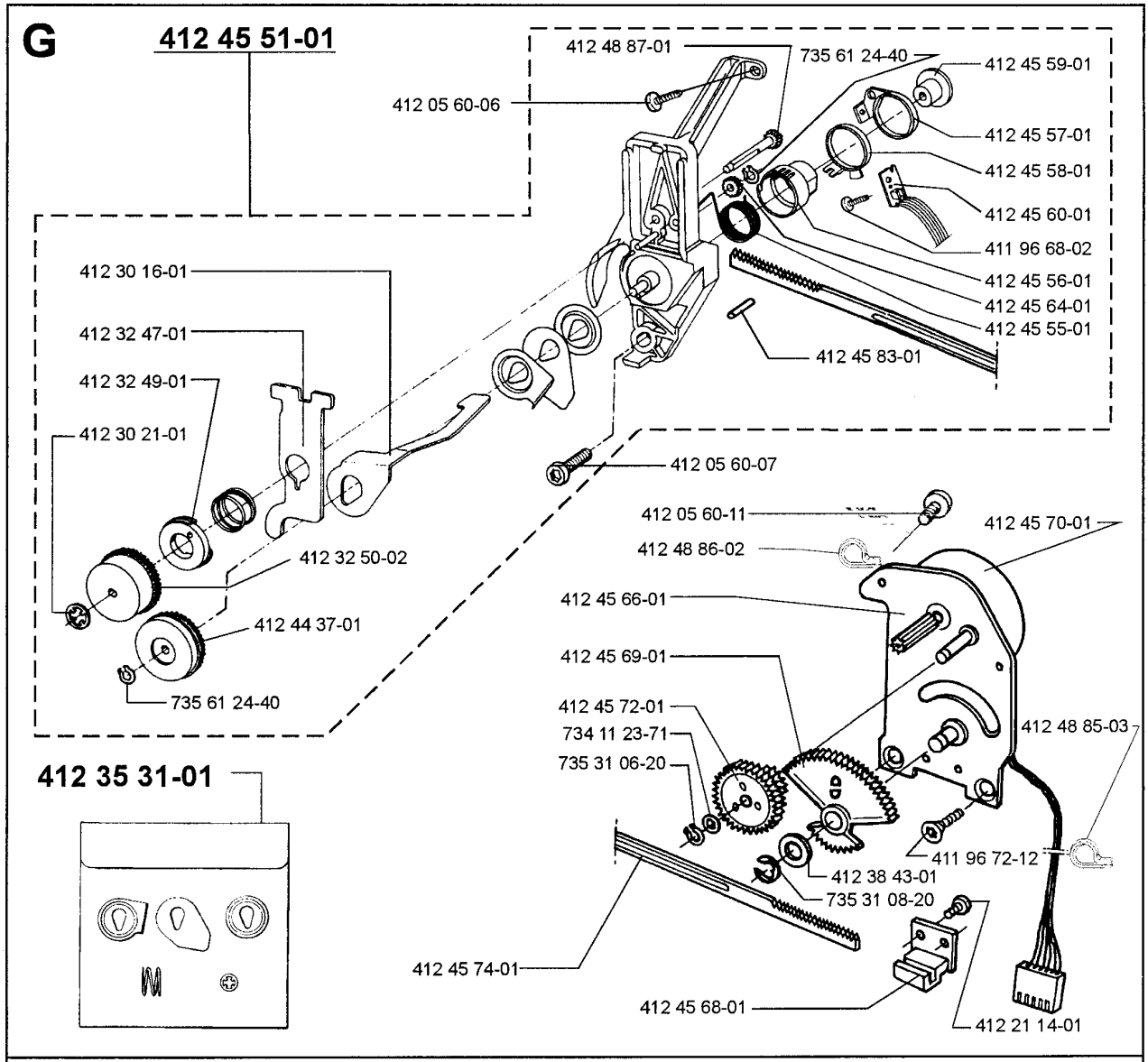
G
412 45 51-01
412 48 87-01
735 61 24-40
412 45 59-01
412 05 60-06
412 45 57-01
412 45 58-01
412 45 60-01
411 96 68-02
412 30 16-01
412 45 56-01
412 45 64-01
412 32 47-01
412 45 55-01
412 45 83-01
412 32 49-01
412 30 21-01
412 05 60-07
412 05 60-11
412 45 70-01
412 48 86-02
412 32 50-02
412 45 66-01
412 44 37-01
412 45 69-01
735 61 24-40
412 45 72-01
734 11 23-71
412 48 85-03
735 31 06-20
412 35 31-01
411 96 72-12
412 38 43-01
735 31 08-20
412 45 74-01
412 45 68-01
412 21 14-01

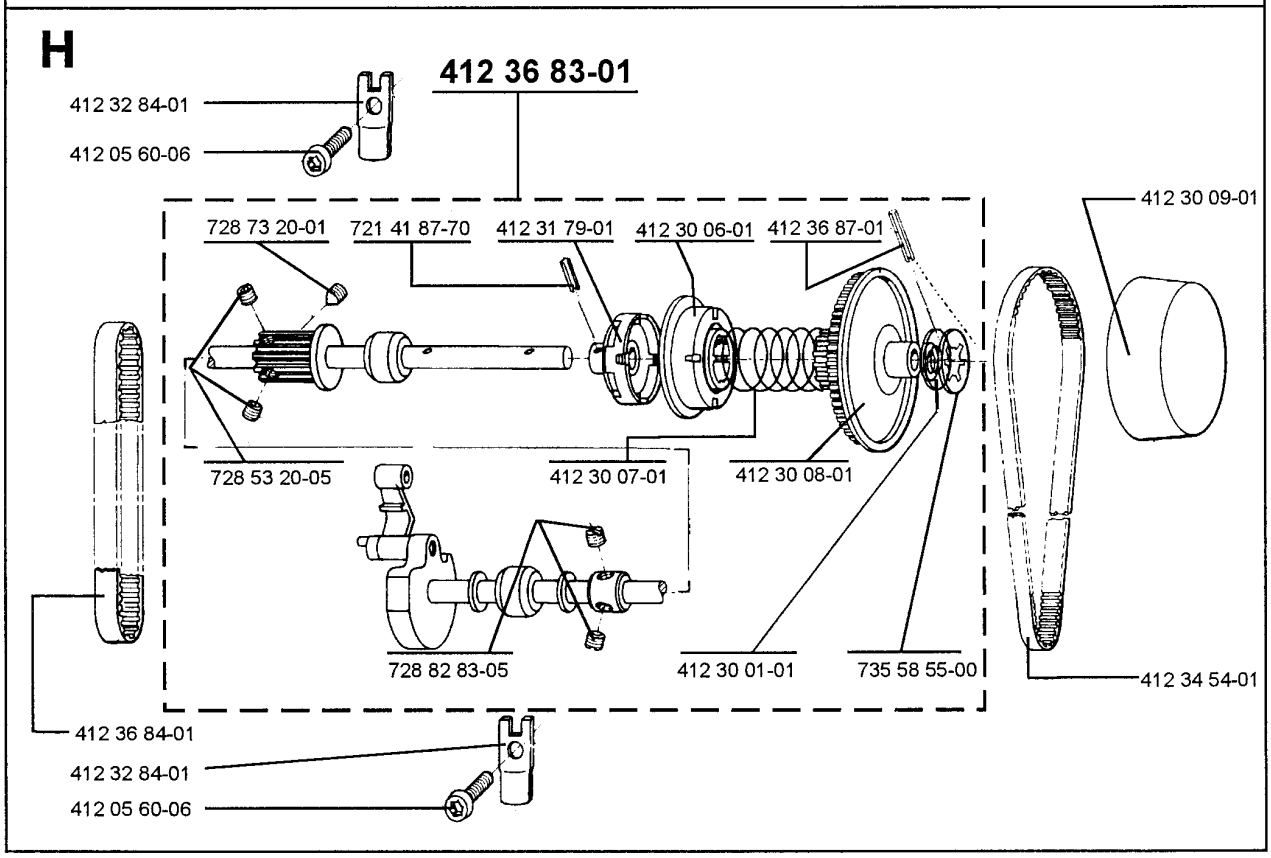
H
412 36 83-01
412 32 84-01
412 05 60-06
412 30 09-01
728 73 20-01
721 41 87-70
412 31 79-01
412 30 06-01
412 36 87-01
728 53 20-05
412 30 07-01
412 30 08-01
728 82 83-05
412 30 01-01
735 58 55-00
412 34 54-01
412 36 84-01
412 32 84-01
412 05 60-06

J

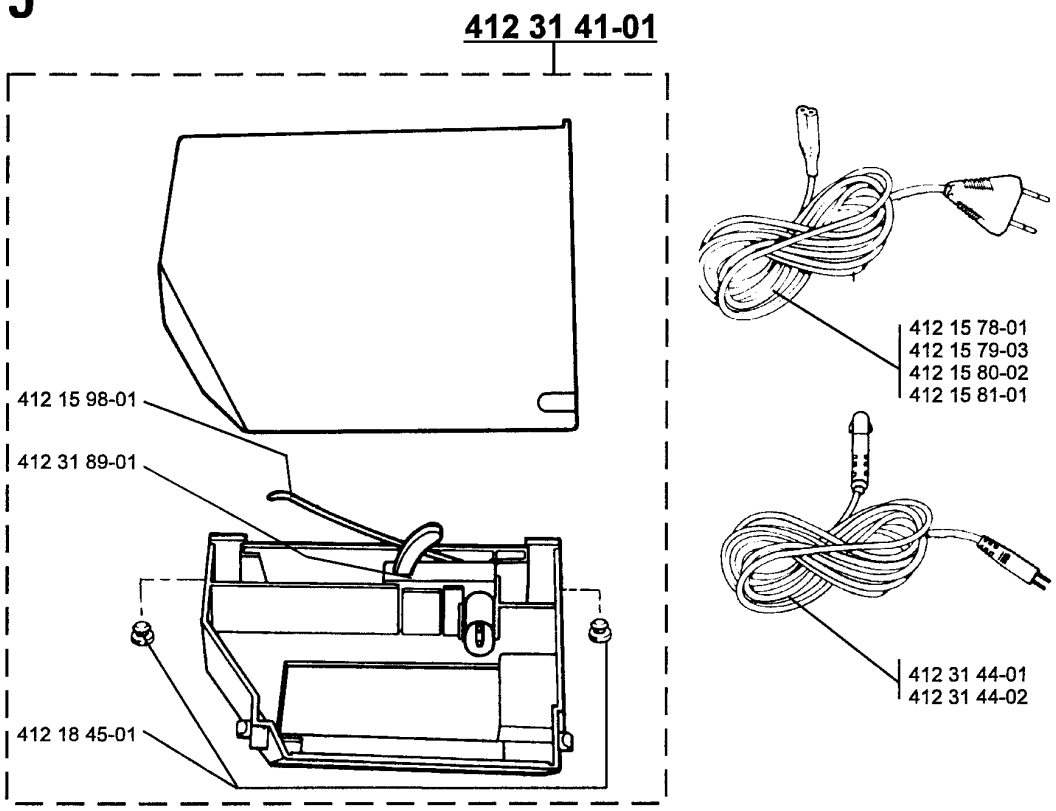
412 31 41-01
412 15 98-01
412 31 89-01
412 18 45-01
412 15 78-01
412 15 79-03
412 15 80-02
412 15 81-01
412 31 44-01
412 31 44-02

K

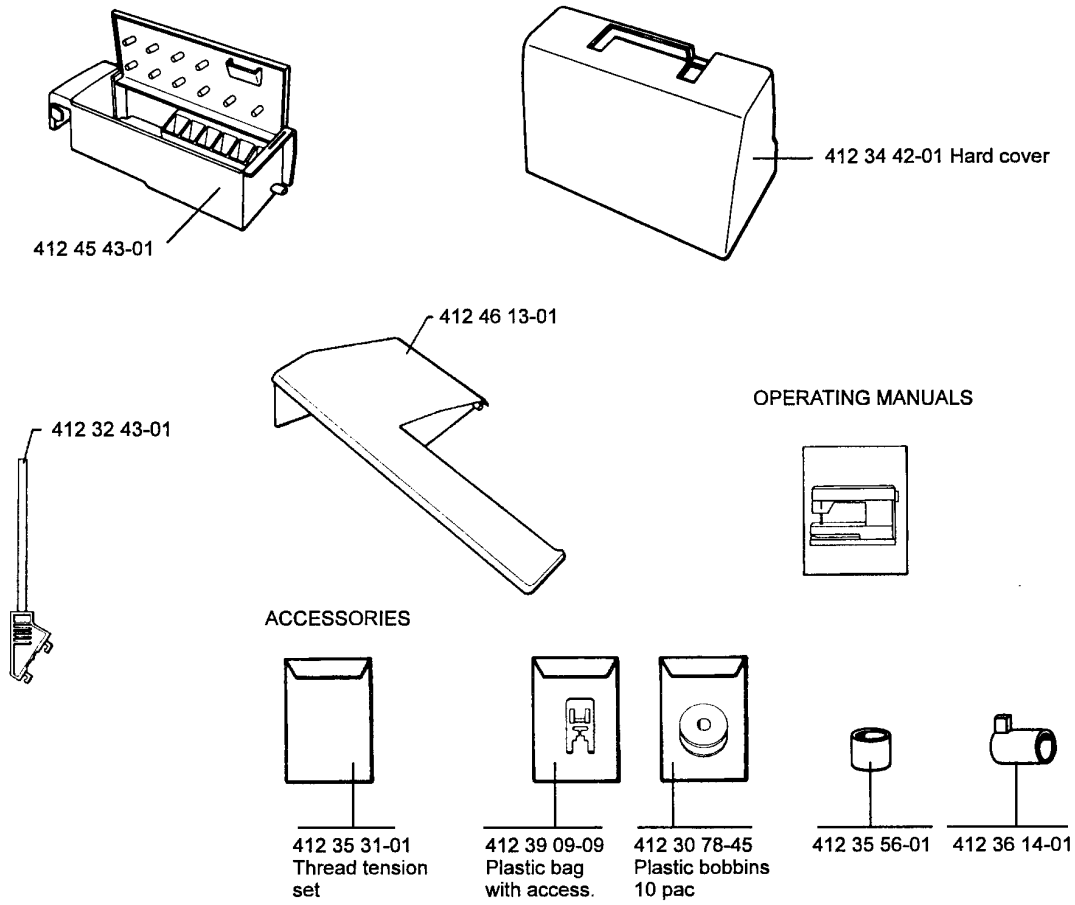
412 45 43-01
412 34 42-01 Hard cover
412 46 13-01
412 32 43-01
OPERATING MANUALS
ACCESSORIES
412 35 31-01
Thread tension
set
412 39 09-09
Plastic bag
with access.
412 30 78-45
Plastic bobbins
10 pac
412 35 56-01
412 36 14-01